STA-RITE® J/JB Series

General purpose centrifugal pumps

UL778/CSA108

The J/JB Series Pumps have a heavy-duty cast iron construction and are offered in high and medium head models, with Noryl® or silicon bronze impeller.

APPLICATIONS

Water systems and sprinkling...
for homes, farms and industry.

SPECIFICATIONS

Body and Seal Plate: Close-grained cast iron

Base: Steel 12 gauge

Impeller: J Series – Noryl

Impeller: JB Series – Silicon bronze

Shaft: 416 stainless steel

Mechanical Seal: Carbon/ceramic, Buna-N

FEATURES

1/3 through 2-1/2 HP: High head and medium head models, with heavy-duty motors, easy service design and four-position discharge.

Maximum Case Pressure:
JH & JBH – all HP max case 125PSI
JM & JBM – 1/3-1HP 75 PSI
JM & JBM – 1.5-2.5 HP 125 PSI

Drain Port: Provided for easy winterizing.

Medium Head Models: Deliver up to 110' of head with capacities to 140 GPM.

High Head Models: Deliver up to 140' of head with capacities to 90 GPM.

Easy Serviceability: All models include replaceable wear ring and feature back pull-out design.

J Series with Noryl Impellers:
Abrasion-resistant for normal applications with working temperatures to 140°F.

JB Series with Silicon Bronze:
JB pumps equipped with shaft seals rated for temperatures to 225°F.

ORDERING INFORMATION

HIGH HEAD

Catalog Number		HP	Pipe Tapping Sizes		Motor Voltage	Phase	Approx. Wt. Lbs.
Noryl® Impeller	Silicon Bronze Impeller		Suct.	Disch.			
JHB	JBHB	1/3	1-1/4"	1"	115/230	1	38
JHC	JBHC	1/2	1-1/4"	1"	115/230	1	39
JHC2	JBH2C		1-1/4"	1"	200	1	39
JHC3	JBHC3		1-1/4"	1"	208-230/460	3	39
JHD	JBHD	3/4	1-1/4"	1"	115/230	1	42
JH2D3	–		1-1/4"	1"	200	3	42
JHD3	JBHD3		1-1/4"	1"	208-230/460	3	42
JHE	JBHE	1	1-1/4"	1"	115/230	1	45
JH2E	JBH2E		1-1/4"	1"	200	1	45
JHE3	JBHE3		1-1/4"	1"	208-230/460	3	45
JHF	JBHF	1-1/2	1-1/4"	1"	115/230	1	49
JH2F	–		1-1/4"	1"	200	1	49
JH2F3	–		1-1/4"	1"	200	3	49
JHF3	JBHF3		1-1/4"	1"	208-230/460	3	49
JHG	JBHG	2	1-1/2"	1-1/4"	115/230	1	69
JHG3	–		1-1/2"	1-1/4"	200	3	69
JHG3	JBHG3		1-1/2"	1-1/4"	208-230/460	3	69
JHHG	JBHHG	2-1/2	2"	1-1/2"	115/230	1	74
JHHG3	JBHHG3		2"	1-1/2"	208-230/460	3	74

ORDERING INFORMATION

MEDIUM HEAD

Catalog Number		HP	Pipe Tapping Sizes		Motor Voltage	Phase	Approx. Wt. Lbs.
Noryl® Impeller	Silicon Bronze Impeller		Suct.	Disch.			
JMB	JBMB	1/3	1-1/4"	1"	115/230	1	38
JMC	JBMC	1/2	1-1/4"	1"	115/230	1	39
JMC3	JBMC3		1-1/4"	1"	208-230/460	3	39
JMD	JBMD	3/4	1-1/4"	1"	115/230	1	42
–	JBM2D		1-1/4"	1"	200	1	42
–	JBM2D3		1-1/4"	1"	200	3	42
JMD3	JBMD3		1-1/4"	1"	208-230/460	3	42
JME	JBME	1	1-1/2"	1-1/4"	115/230	1	43
JME	–		1-1/2"	1-1/4"	200	1	43
–	JBM2E3		1-1/2"	1-1/4"	200	3	43
JME3	JBME3		1-1/2"	1-1/4"	208-230/460	3	43
JMF	JBMF	1-1/2	1-1/2"	1-1/4"	115/230	1	54
JMF	–		1-1/2"	1-1/4"	200	1	54
–	JBM2F3		1-1/2"	1-1/4"	200	3	54
JMF3	JBMF3		1-1/2"	1-1/4"	208-230/460	3	54
JMG	JBMG	2	1-1/2"	1-1/4"	115/230	1	66
–	JBM2G3		1-1/2"	1-1/4"	200	3	66
JMG3	JBMG3		1-1/2"	1-1/4"	208-230/460	3	66
–	JBMMG	2-1/2	2"	1-1/2"	115/230	1	74
–	JBMMG3		2"	1-1/2"	208-230/460	3	74

Pentair trademarks and logos are owned by Pentair plc or its affiliates. All other third party registered and unregistered trademarks and logos are the property of their respective owners.

PENTAIR

STA-RITE® J/JB Series

General purpose centrifugal pumps

PUMP PERFORMANCE: HIGH HEAD

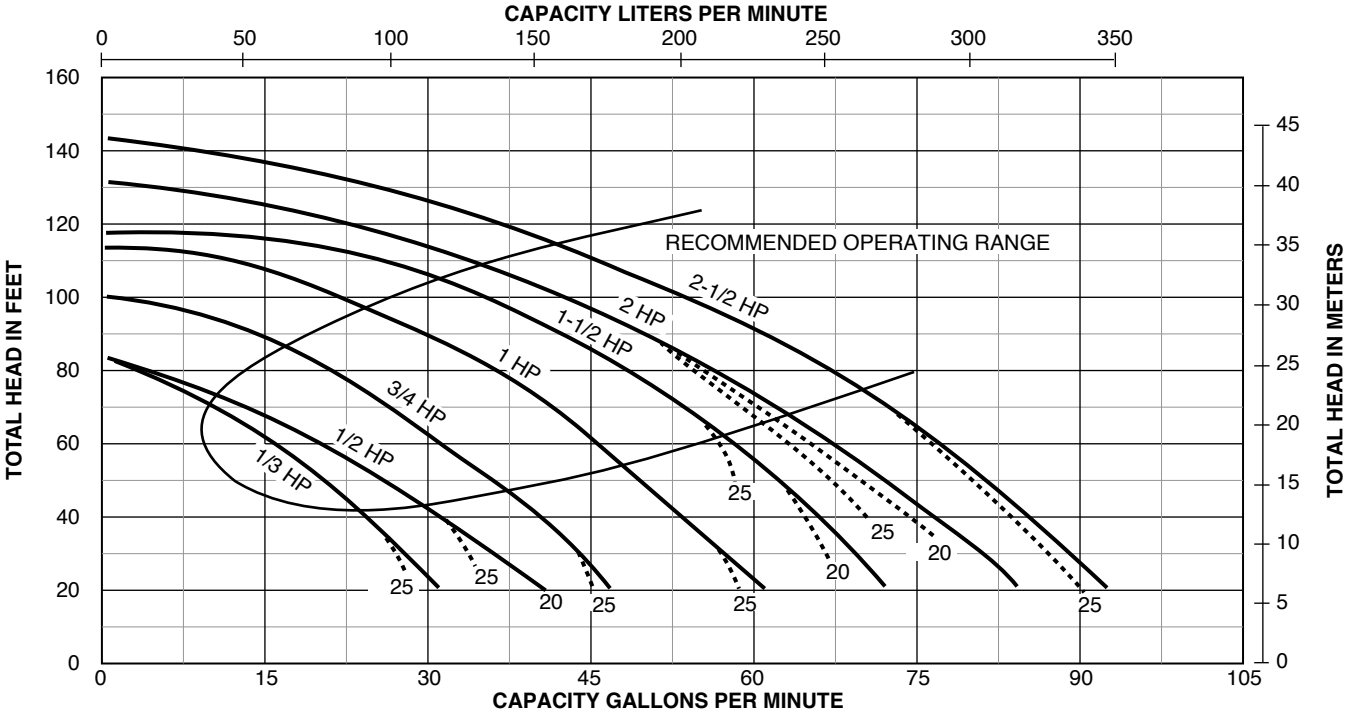

NOTE: Dotted lines indicate performance reduction at high suction lift.

PUMP PERFORMANCE (Capacity in gallons per minute)

HIGH HEAD

HP	Discharge Pressure		Dynamic Suction Lift				
	PSI	Feet Head	5'	10'	15'	20'	25'
1/3	10	23.1	—	26	24	22	20
	20	46.2	20	18	15	11	10
	30	69.3	6	—	—	—	—
1/2	10	23.1	—	34	32	29	26
	20	46.2	25	21	18	15	11
	30	69.3	10	—	—	—	—
3/4	10	23.1	—	—	42	39	37
	20	46.2	35	32	30	28	26
	30	69.3	24	22	19	15	10
1	20	46.2	48	46	45	43	40
	30	69.3	38	35	31	28	25
	40	92.4	23	20	15	—	—

PUMP PERFORMANCE (Capacity in gallons per minute)

HIGH HEAD

HP	Discharge Pressure		Dynamic Suction Lift				
	PSI	Feet Head	5'	10'	15'	20'	25'
1-1/2	20	46.2	62	60	58	55	52
	30	69.3	50	48	44	40	37
	40	92.4	37	32	29	22	—
2	20	46.2	71	68	66	62	60
	30	69.3	60	57	52	59	45
	40	92.4	45	40	36	31	24
	50	115.5	22	15	—	—	—
2-1/2	20	46.2	81	79	76	74	71
	30	69.3	69	67	63	60	56
	40	92.4	56	51	47	44	38
	50	115.5	33	30	22	15	—

Tested and rated in accordance with Water Systems Council Standards.

NOTE: Pumps installed with a Pro-Source® tank require a 100 PSI relief valve. Pumps with a conventional tank require a 75 PSI relief valve. Relief valve must be capable of relieving entire flow of pump at relief pressure.

STA-RITE® J/JB Series

General purpose centrifugal pumps

PUMP PERFORMANCE: MEDIUM HEAD

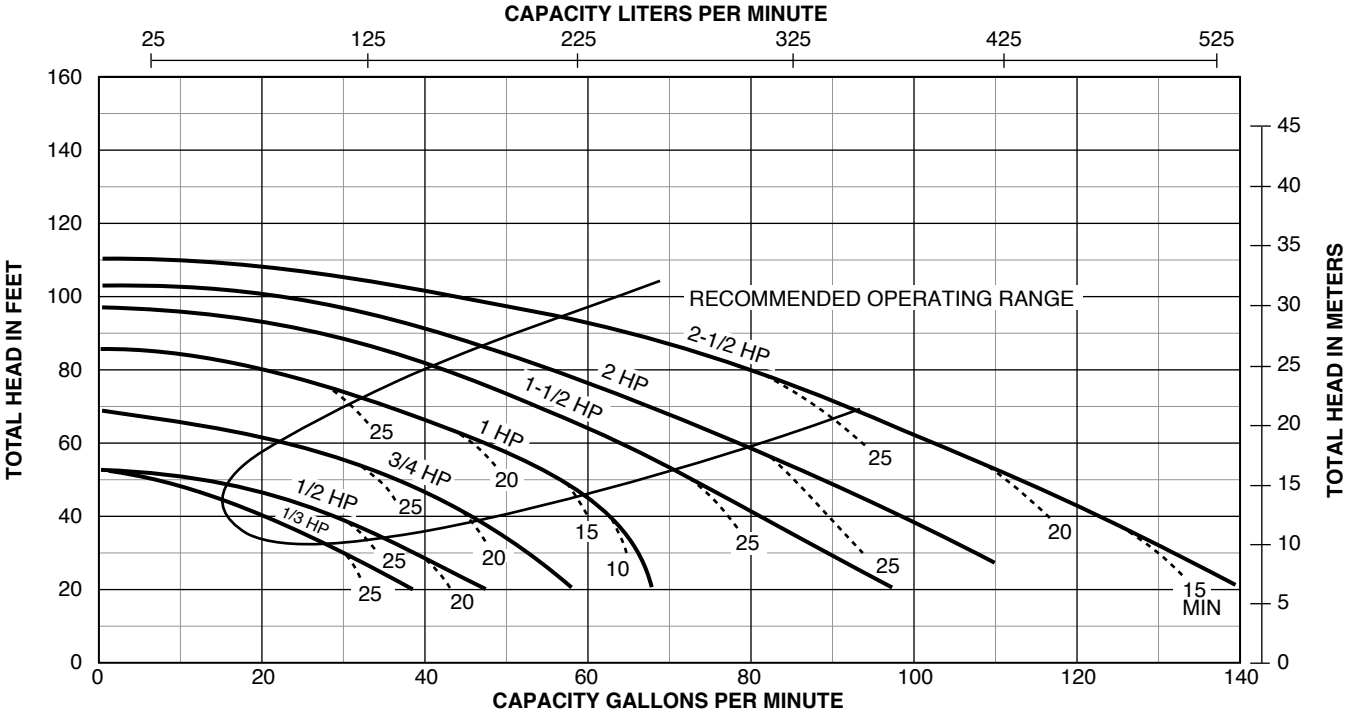

NOTE: Dotted lines indicate performance reduction at high suction lift.

PUMP PERFORMANCE (Capacity in gallons per minute)

MEDIUM HEAD

HP	Discharge Pressure		Dynamic Suction Lift				
	PSI	Feet Head	5'	10'	15'	20'	25'
1/3	10	23.1	32	27	18	—	—
	20	46.2	—	—	—	—	—
1/2	10	23.1	40	37	32	27	17
	20	46.2	—	—	—	—	—
3/4	10	23.1	—	50	46	42	32
	20	46.2	37	29	21	—	—
1	20	46.2	54	51	44	40	33
	30	69.3	33	28	18	—	—
1-1/2	20	46.2	71	69	62	57	51
	30	69.3	52	47	34	30	20
2	20	46.2	88	84	78	70	66
	30	69.3	67	60	50	45	40
	40	92.4	25	13	—	—	—
2-1/2	20	46.2	111	106	101	95	90
	30	69.3	90	83	77	70	60
	40	92.4	46	38	20	—	—

Tested and rated in accordance with Water Systems Council Standards.

NOTE: Pumps installed with a Pro-Source® tank require a 100 PSI relief valve. Pumps with a conventional tank require a 75 PSI relief valve. Relief valve must be capable of relieving entire flow of pump at relief pressure.

STA-RITE® J/JB Series

General purpose centrifugal pumps

OUTLINE DIMENSIONS

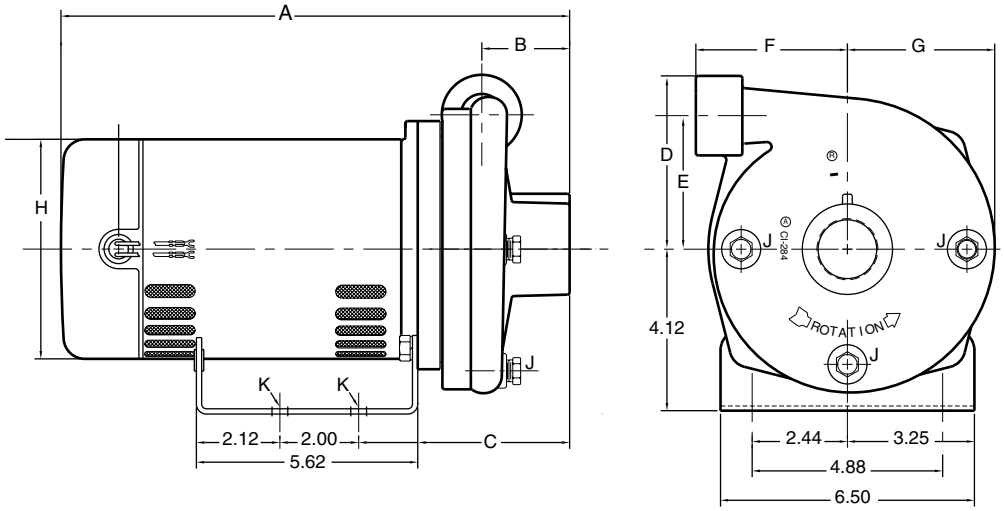

Dimensions (in inches) are for estimating purposes only.

DIMENSIONS (IN INCHES)

HP	NPT Suct.	NPT Disch.	A (1 Phase)	A (3 Phase)	B	C	D	E	F	G	H	NPT J	K
HIGH HEAD													
1/3	1-1/4	1	13	13-3/8	2-1/16	5-9/16	4-1/2	3-7/16	3-7/8	3-15/16	5-5/8	1/4	3/8 Dia.
1/2	1-1/4	1	11-21/32	13-3/8	2-1/16	5-9/16	4-1/2	3-7/16	3-7/8	3-15/16	5-5/8	1/4	3/8 Dia.
3/4	1-1/4	1	11-25/32	13-3/8	2-1/16	5-9/16	4-1/2	3-7/16	3-7/8	3-15/16	5-5/8	1/4	3/8 Dia.
1	1-1/4	1	12-25/32	13-7/8	2-1/16	5-9/16	4-1/2	3-7/16	3-7/8	3-15/16	5-5/8	1/4	3/8 Dia.
1-1/2	1-1/4	1	13-39/64	14-3/8	2-1/16	5-9/16	4-1/2	3-7/16	3-7/8	3-15/16	5-5/8	1/4	3/8 Dia.
2	1-1/2	1-1/4	16-3/4	16-15/16	2-13/16	6-5/16	4-27/32	3-13/32	4-5/8	4	6-7/16	1/4	3/8 Dia.
2-1/2	2	1-1/2	17-3/4	17-1/4	2-13/16	6-5/16	4-27/32	3-13/32	4-5/8	4	6-7/16	1/4	3/8 Dia.
MEDIUM HEAD													
1/3	1-1/4	1	12-9/16	12-15/16	1-7/16	5-1/8	4-7/16	3-1/4	2-1/4	3-1/4	5-5/8	1/4	3/8 Dia.
1/2	1-1/4	1	11-7/32	12-15/16	1-7/16	5-1/8	4-7/16	3-1/4	2-1/4	3-1/4	5-5/8	1/4	3/8 Dia.
3/4	1-1/4	1	11-31/32	12-15/16	1-7/16	5-1/8	4-7/16	3-1/4	2-1/4	3-1/4	5-5/8	1/4	3/8 Dia.
1	1-1/2	1-1/4	12-11/32	13-7/16	1-7/16	5-1/8	4-7/16	3-1/4	2-1/4	3-1/4	5-5/8	1/4	3/8 Dia.
1-1/2	1-1/2	1-1/4	13-25/32	14-9/16	2	5-3/4	4-13/16	3-1/2	4-1/4	3-15/16	5-5/8	1/4	3/8 Dia.
2	1-1/2	1-1/4	16-3/16	16-3/8	2	5-3/4	4-13/16	3-1/2	4-1/4	3-15/16	6-7/16	1/4	3/8 Dia.
2-1/2	2	1-1/2	17-3/16	16-11/16	2	5-3/4	4-13/16	3-1/2	4-1/4	3-15/16	6-7/16	1/4	3/8 Dia.

PENTAIR

US: 293 WRIGHT STREET, DELAVAN, WI 53115 WWW.STA-RITE.COM PH: 888-782-7483 ORDERS FAX: 800-426-9446
CANADA: 490 PINEBUSH ROAD, UNIT 4, CAMBRIDGE, ONTARIO N1T 0A5 PH: 800-363-7867 ORDERS FAX: 888-606-5484

Because we are continuously improving our products and services, Pentair reserves the right to change specifications without prior notice.

©2017 Pentair plc. All Rights Reserved.